

YANMAR®

Electronic Control System Installation Manual for BY Series Engines with Classic Controls

ELECTRONIC CONTROL SYSTEM MANINBYCM01 REVISION 1.5

CE RECREATIONAL CRAFT DIRECTIVE 94/25/EC

Maximum performance, and compliance with the EMC Directive, can only be ensured by correct installation. It is strongly recommended that the installation conforms with the following standards:

APPLICABLE STANDARDS

a) ISO 8846 Small Craft-Electrical Devices
Protection against ignition of surrounding flammable gases.

b) ISO = International Standards Organization

SAFE BOATING STATEMENT

This device meets or exceeds the applicable ABYC, ISO, and USCG safe boating rules, regulations, standards, and guidelines.

SAFE BOATING ON THE WEB

U.S. Coast Guard www.uscg.mil
U.S. Power Squadron www.usps.org

ABYC American Boat & Yacht Council (http://www.abycinc.org)

NMEA 2000® is a registered trademark of the National Marine Electronics Association.

NOTICE TO INSTALLER

All information, illustrations and specifications in this manual are based on the latest information available at the time of publishing. The illustrations used in this manual are intended as representative reference views only. Moreover, because of our continuous product improvement policy, we may modify information, illustrations and / or specifications to explain and/or exemplify a product, service or maintenance improvement. We reserve the right to make any change at any time without notice. Yanmar and YANMAR are registered trademarks of Yanmar Co., Ltd. in Japan, the United States and/or other countries.

Safety alerts alone cannot eliminate the hazards that they signal. Strict compliance to these special instructions when performing installation, operation, and maintenance is the most effective accident prevention measure along with exercising care and using common sense when performing such actions.

California
Proposition 65 Warning

Diesel engine exhaust and some of its constituents are known to the state of California to cause cancer, birth defects, and other reproductive harm.

California
Proposition 65 Warning

Battery posts, terminals, and related accessories contain lead and lead compounds, chemicals known to the state of California to cause cancer and reproductive harm.
Wash hands after handling.

All Rights Reserved:

No part of this publication may be reproduced or used in any form by any means - graphic, electronic, or mechanical, including photocopying, recording, taping, or information storage and retrieval systems - without the written permission of Yanmar Marine International.

Table of Contents

Components 2

Installation 4

Route the Engine Harness 4

Route the Shift Cable 5

Install Battery Switch and Engine Breaker 6

Install the Engine 7

Connect the Items in the Engine Area 7

Install the Shifter 8

Install the Helm Components 8

Install the Tachometer 9

Wiring Diagram 10

Check Out and Operation 12

Start the Engine 12

Move the Boat 12

Shut Down 12

Tachometer Display 12

Operation 13

Tachometer Menu Structure 13

Alarms 16

Warning Light 16

Engine Status Information 16

Templates 17

3” Gauge (Tachometer) with Key Cut 17

3” Gauge (Tachometer) without Key Cut 19

2” Gauge with Key Cut 21

2” Gauge without Key Cut 21

CH18000 Single Top Mount Control 23

CH18000 Dual Top Mount Control 25

CH18000 Side Mount Control 27

Key Switch Panel - CP19400 29

Appendix A: Analog Gauges - Stud Connections 31

Appendix B: Analog Gauges - Plug and Play 32

Appendix C: Trim Diagrams 33

Dual Engine 33

Single Engine 34

© Yanmar 2008

Components

Please familiarize yourself with the following components:

CH18000 Series
Side Mount Control



OR

CH18000 Series
Top Mount Control



OR

CH18000 Series
Dual Top Mount Control



Tachometer
with Digital Display



Ignition Switch



© Yanmar 2008

Components

CE500XX Engine Harness



CE503XX Engine Extension Harness



Warning Light / Cut-off Switch / Audible Alarm



Cut-off Switch with Lanyard attached



© Yanmar 2008

Installation

This book represents a stern drive installation, because there are more items involved to install. Marine gear (inboard) installations are similar but have less parts.

Dual engines are installed as two single engine systems with a common control head.

The tasks that must be completed to hook up the BY Classic Control Systems are as follows (This section takes you through each task area).

- Route the CE500XX engine harness from the engine area to the helm and install and connect the items that are attached to the transom.
- Route the shift cable from the engine area to the helm.
- Install battery switch and engine breaker.
- Install the engine.
- Connect the items in the engine area.
- Install the shifter and the tachometer.
- Install the remaining helm components.
- Connect the items at the helm.
- Check out the installation.

Warning: Make all connections in accordance with applicable codes and standards.

Route the CE500XX Engine Harness

Mount the stern drive transom plate, gear lube reservoir, and trim pump per the stern drive instructions.

Gear Oil



Trim Pump



© Yanmar 2008

Install a CM10055 terminator into the “J” connector at the helm end of the CE500XX engine harness and another CM10055 terminator into the “J” connector at the transom breakout of the engine harness. If they are not installed, they will be in the kit and need to be plugged into the connectors,

Run the engine harness from the helm to the transom area. The engine harness has three main connection points, the helm, the transom and the engine.

CE500XX Helm End



CE500XX Transom Breakout



CE500XX to Engine

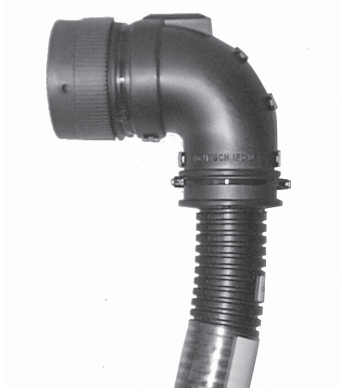

Attach the transom breakout point to the transom near the centerline of the engine and high enough that you can access this point after the installation is complete. Make the following connections and dress the wires.

- Gear Oil Return (Black) and Gear Oil (Brown) connect to the Gear Oil Reservoir. Tie back when using Marine Gear.
- Trim Position Return (Black) and Drive Trim Position (Dark Blue) connect to wires from the transom plate. Tie back when using Marine Gear.
- Fuel Return (Black) and Fuel (Pink) go to the fuel sender.
- Tie the J7 NMEA connector back at this time. This connector is supplied for future NMEA 2000® connections.

Leave the helm end and the engine end disconnected at this time.

Route the Shift Cable

Mount the shift plate that came with the stern drive near the stern drive transom plate and route the shift cable from this area to the helm where the control will be mounted. The upper cable goes to the helm and the lower cable goes to the stern drive.

Shift Plate

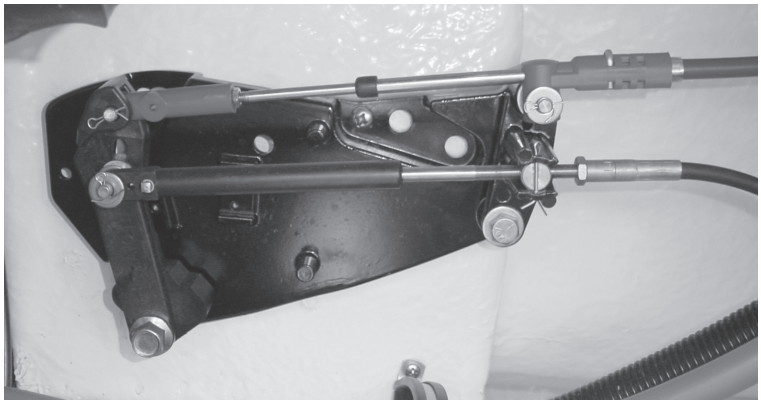

Install Battery Switch and Engine Breaker

Install the battery switch. Then, close to the battery switch, install an 50 amp circuit breaker. An 80 amp breaker is used when the "glow plug" option is specified. The circuit breaker will need to be located so the 2.5 meter (8 foot) cable supplied on the engine can reach the breaker. Do not extend this cable.

The wire from the battery switch to the circuit breaker should not be longer than one meter (3 feet). The wire size should be 10mm^2 (AWG 6).

The wire size of the main ground cable and the cable to the starter motor should be sized based on their length. When determining the wire size add the length of the negative cable from the engine block to the battery and the length of the positive cable from the starter to the battery together.

Distance	Wire size	
Up to 5 meters (16 feet)	20mm^2	AWG 4
Up to 9 meters (30 feet)	40mm^2	AWG 1

Breaker Wiring Diagram

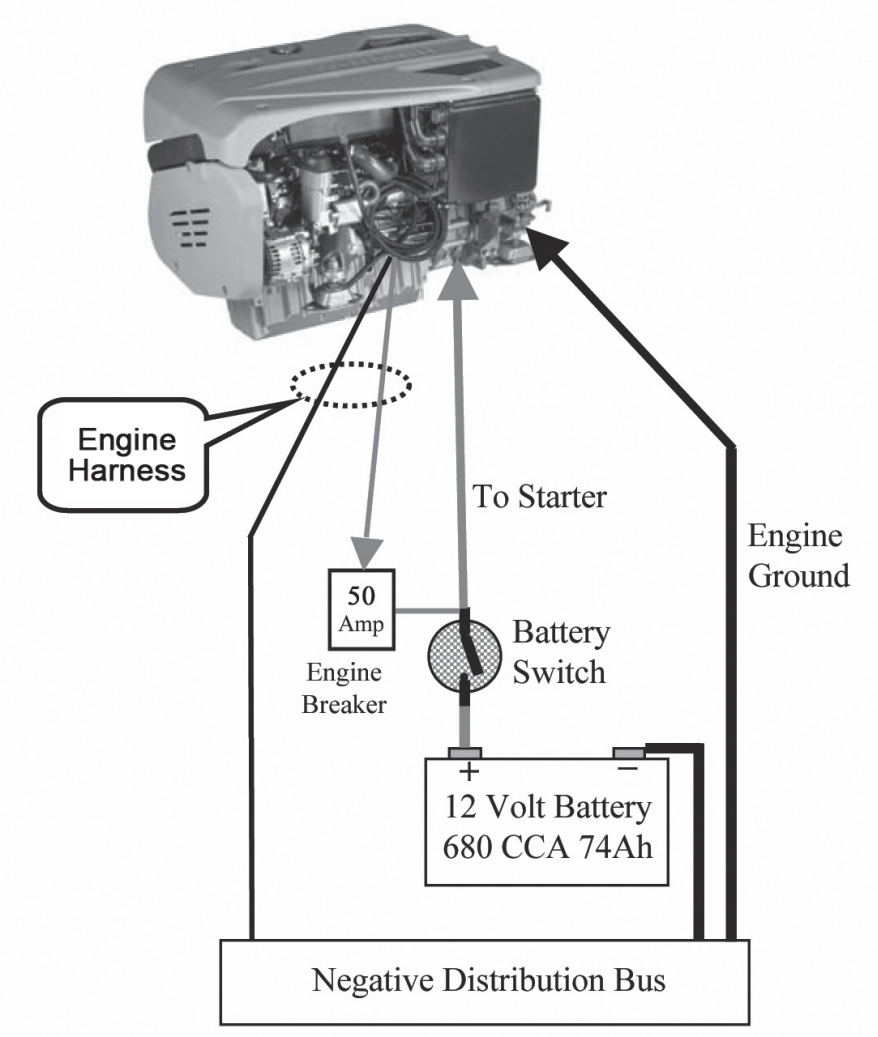

© Yanmar 2008

Install the Engine

Install and align the engine per the instructions that come with the engine and the stern drive.

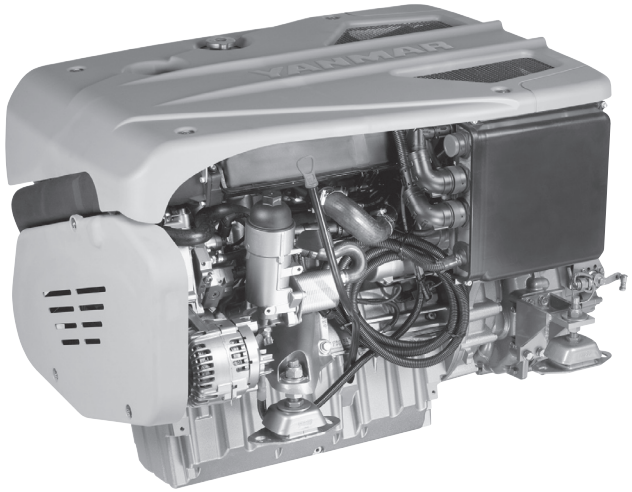

Connect the Items in the Engine Area

Route the CE500XX engine harness from the center of the transom to the top connector of the engine computer box located on the left side of the engine. Route the power cable from the engine to the 50 amp engine breaker installed earlier. Connect the ground to the common block and complete the connections per the diagram on page 6.

Engine Harness Connection

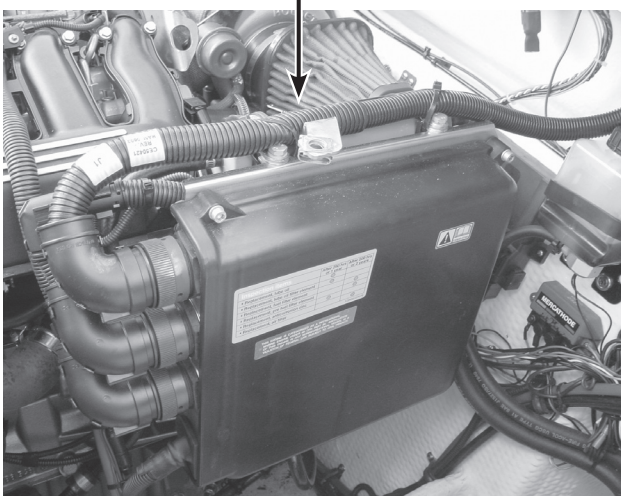

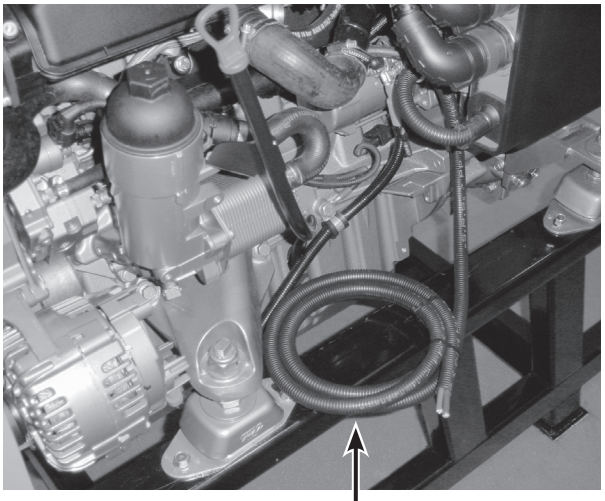

Engine Electronics Connection

© Yanmar 2008

Install the Shifter

Use the template supplied with the shifter on pages 23 and 27 of this manual to cut out the opening for the control head. Mount the shifter and connect the shift cable to the control head per the Control Instruction Manual supplied with the Control Head. For the Dual Top Mount Control Head (not shown) see instructions that come with the control.

CH18000 Series Side Mount
front view



CH18000 Series Side Mount
rear view
shown with shift control cable

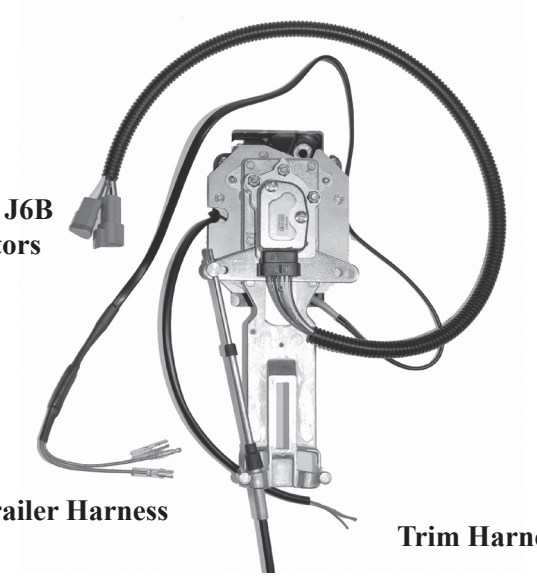

CH18000 Series Top Mount
front view



CH18000 Series Top Mount
rear view
shown with shift control cable



Connect the CE500XX cable that was routed to the helm earlier. The J6A and the J6B connectors mate with the connectors on the control. Connect the trim harness supplied with the stern drive to the Trim Harness Pigtail. Connect the Trailer Harness.

© Yanmar 2008

Install the Helm Components

The following items are supplied as part of kit CP19400K. Locate an appropriate place and mount each item near the helm. The audible alarm should be mounted behind the helm so it is out of the weather.

- Key Switch
- Cut-off Switch
- Indicator LED
- Audible Alarm

Key Switch (front and back)



Cut-off Switch (front and back)

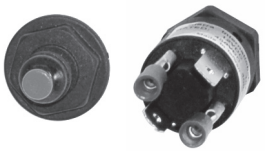

Indicator LED (front and back)



Audible Alarm



Cut-off Switch with Lanyard

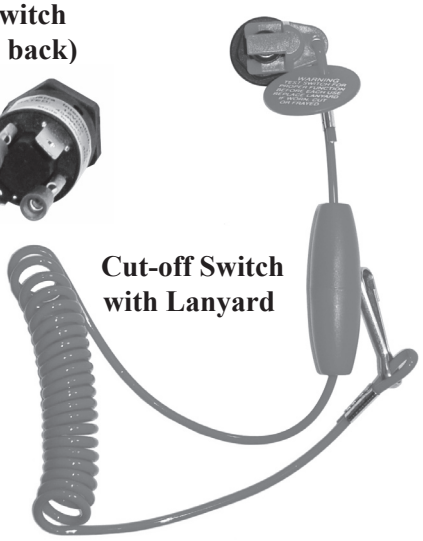

When the parts are mounted connect the items to the CE500XX cable as shown in the diagram.

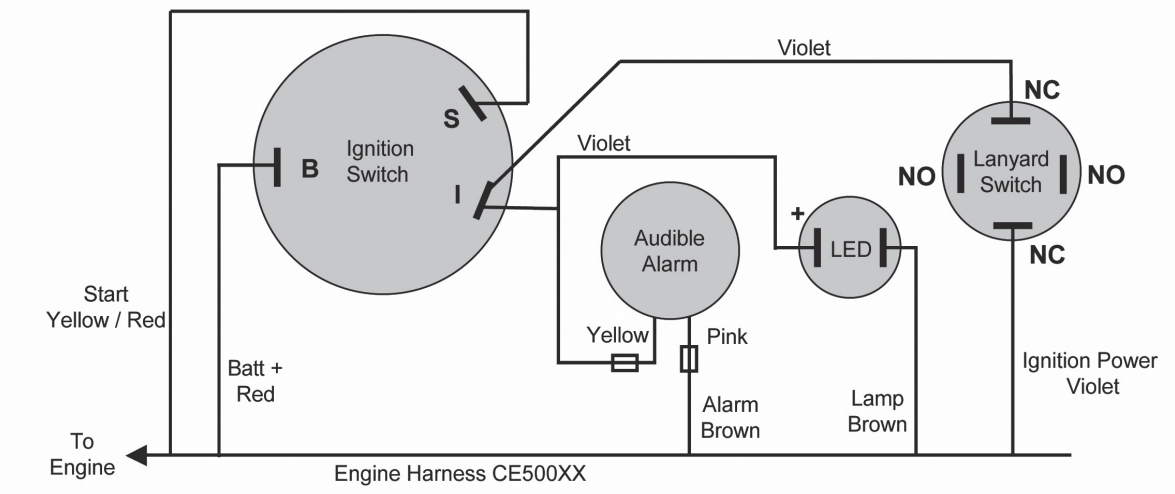

Connect the Alarm EMS-1 and Alarm EMS-2 Bullets at the Helm

Install the Tachometer

Back of Tachometer

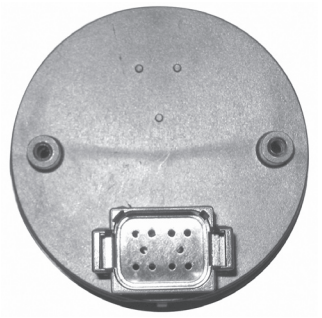

Mount the Tachometer using the cut out template on page 17 or 19 and insert the connector marked J3 tachometer on the CE500XX engine cable. If no other gauges are being used, individually tape back the other wires in the CE500XX harness for future use.

If optional gauges are being installed see Appendix B of this manual.

© Yanmar 2008

BY Classic Wiring Diagram

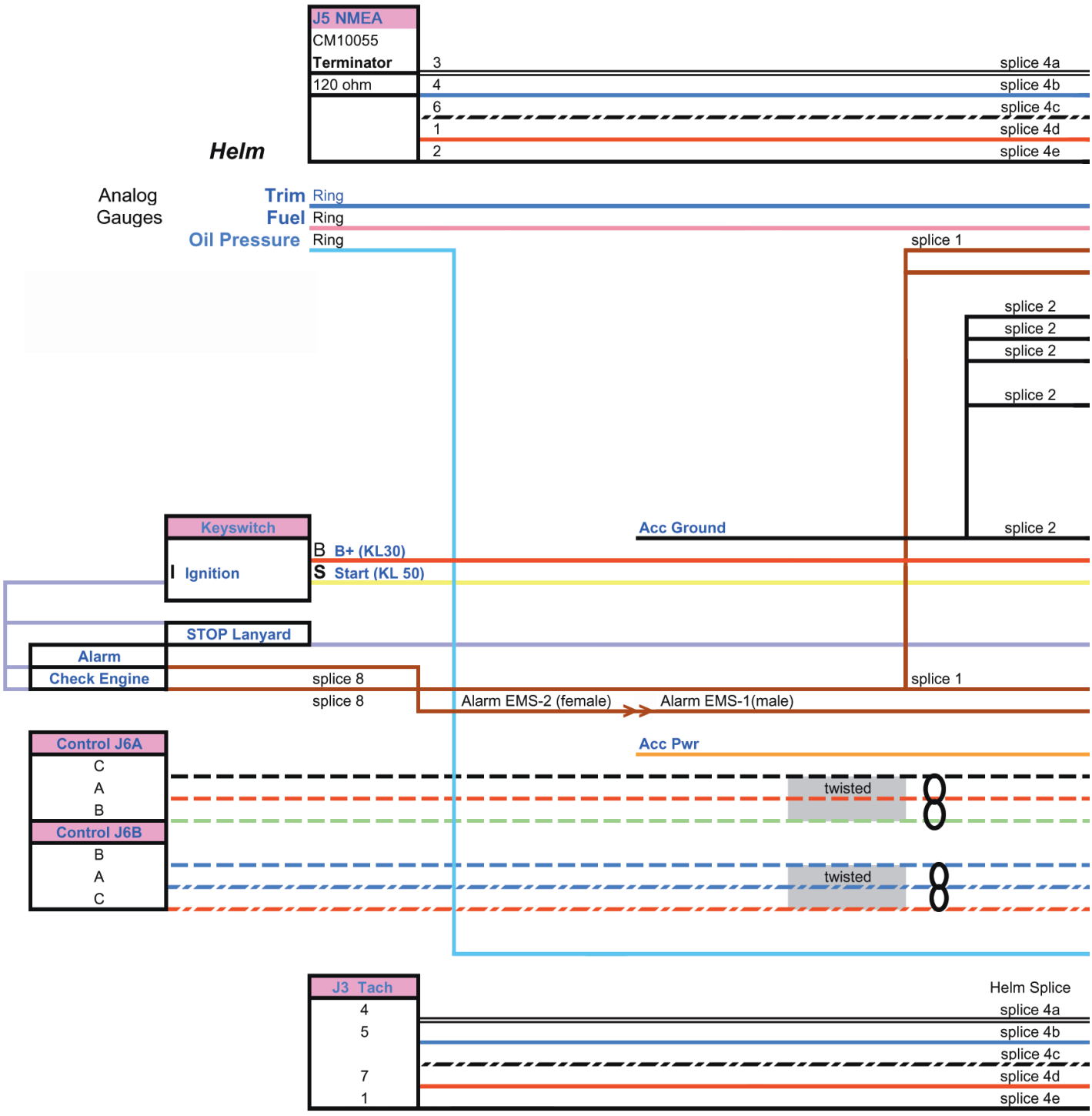

© Yanmar 2008

BY Classic Wiring Diagram

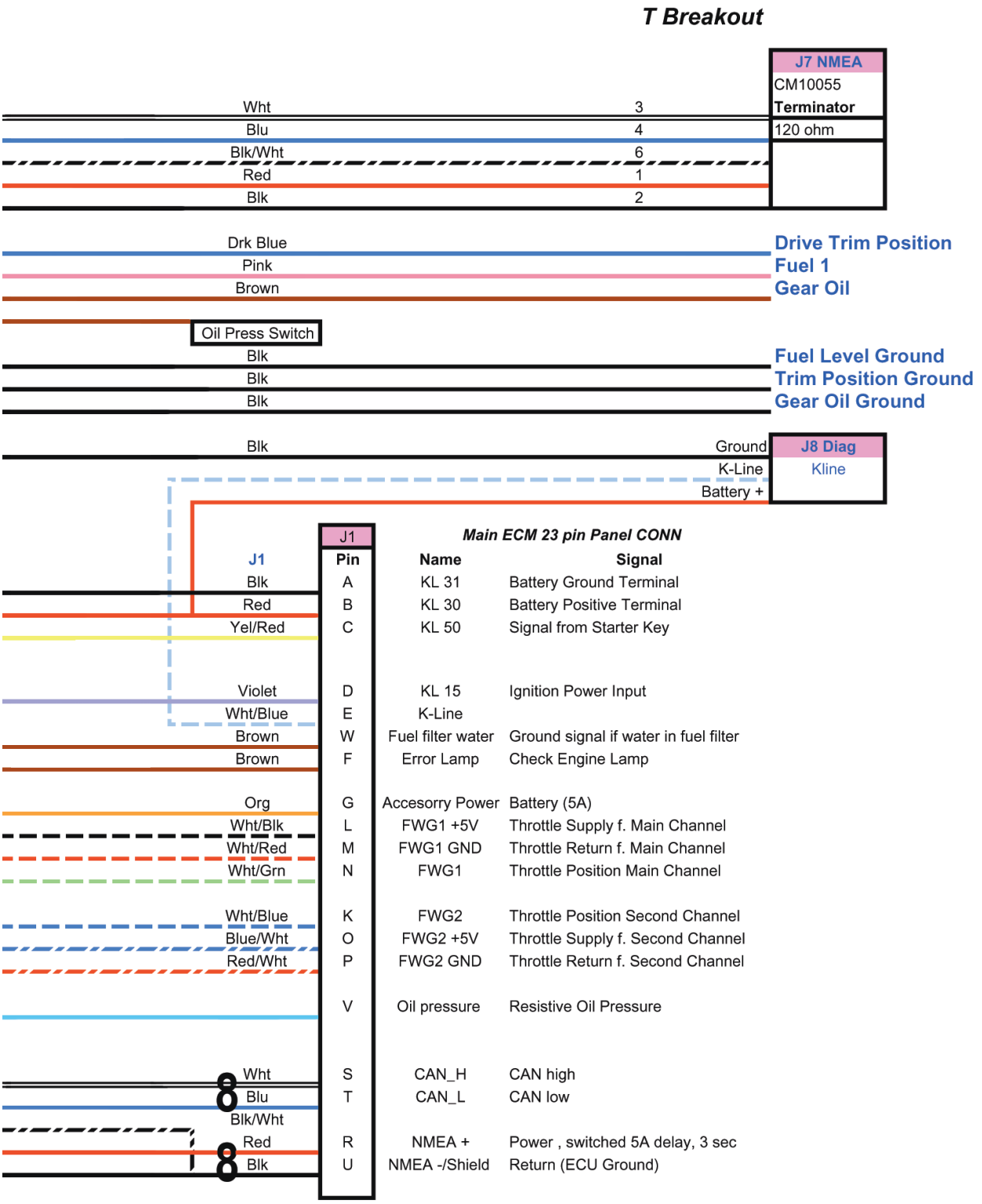

© Yanmar 2008

Checkout and Operation

For complete operating instructions see the Operators Manual, part number MANOPBYCM01.

WARNING
The boat will start to move during the next steps.
Be very cautious when first engaging the gears to establish that forward is truly forward and reverse is truly reverse. A quick in-and-out of gear test is recommended.
Ensure that the boat is clear of all obstacles forward and aft before conducting this test.

To Start the Engine

- Connect the safety lanyard to your person.
- Move the control handle to the NEUTRAL position.
- Turn the key switch to the ON position.
- Turn and hold the key switch at the START position until engine starts.
- When the engine is running allow the key switch to return to the ON position.

The tachometer will indicate the idle RPM's and the boat is ready to operate.

Moving the Boat

Move the control lever from NEUTRAL to a GEAR position. On Side Mount controls it will be necessary to press the Neutral Interlock button. The boat will move. Pushing the handle past the gear detent will advance the throttle.
Always operate the boat in a safe manner.

Shut Down

When ready to shut down the engine return the control to NEUTRAL and turn the Key Switch to the OFF position. This will stop the engine. The Tachometer may rest above "0 rpm."

Tachometer Display

The digital display on the tachometer shows a variety of engine data. The operation of the display is shown on the next pages. All of the items listed here may be seen on the tachometer's digital display.

Data
RPM
Battery Voltage
Coolant Temperature
Boost Pressure
Engine Load
Fuel Rate
Engine Hours
* Fuel Level
* Oil Pressure
* Trim

Alarms
Check Engine Alarm
Hot Engine Alarm
Low System Voltage Alarm
High Boost Pressure Alarm
Throttle Position Sensor Alarm
Neutral Start Protect Alarm

**** No digital value will be displayed for these parameters on Classic Systems.***

© Yanmar 2008

Tachometer Menu Structure

The tachometer menu structure (please refer to detailed diagram on the next two pages) is set up with a Main Menu display, accompanied by their respective submenus. Successfully navigating the main and submenus depends on the familiarization and understanding of how the ENTER, UP, and DOWN buttons are pressed, and in what combination.

To Navigate the Menus:

YANMAR VX.X marine

- After the "Yanmar Marine Power-on" flashes on, the screen will return to the last display viewed on shutdown. Use the UP and DOWN buttons to scroll through the Main Menu items from ENGINE DATA to SYSTEM SETUP.
- To view the submenu features under one of these Main Menu displays, press the ENTER button. Then use the UP button to move forward and the DOWN button to move backward through the submenus.
  - Pressing the UP button at the end of the submenu scrolls directly to the first submenu item.
  - At any time you may return to the Main Menu by pressing the ENTER button.
  - With a bit of practice, navigating the menu should become second nature.

To Customize the Main Menu:

It is possible to customize the Main Menu to better suit your boating needs.

- Scroll through the submenu until the substitute item is found. Press and hold the ENTER button for 3 seconds. The item will be "recognized" as the new choice for the Main Menu display. You will be returned to the Main Menu with the new item displayed and the previous Main Menu item will become part of the submenu.

Control Button Operation



To Enter or Exit a Submenu

- Press ENTER button at any Main Menu display to go into submenus.
- Press ENTER button at any time to exit back to the Main Menu.

To Customize the Main Menu

- Choose submenu item to replace Main Menu item, then **Press and Hold** ENTER button for 3 seconds. This will return you to the Main Menu, replacing the previous item with the one you just chose.

To Operate the Backlight

- Press the up/down buttons at same time (ONLY possible when in Main Menu).

© Yanmar 2008

Tachometer Menu Structure

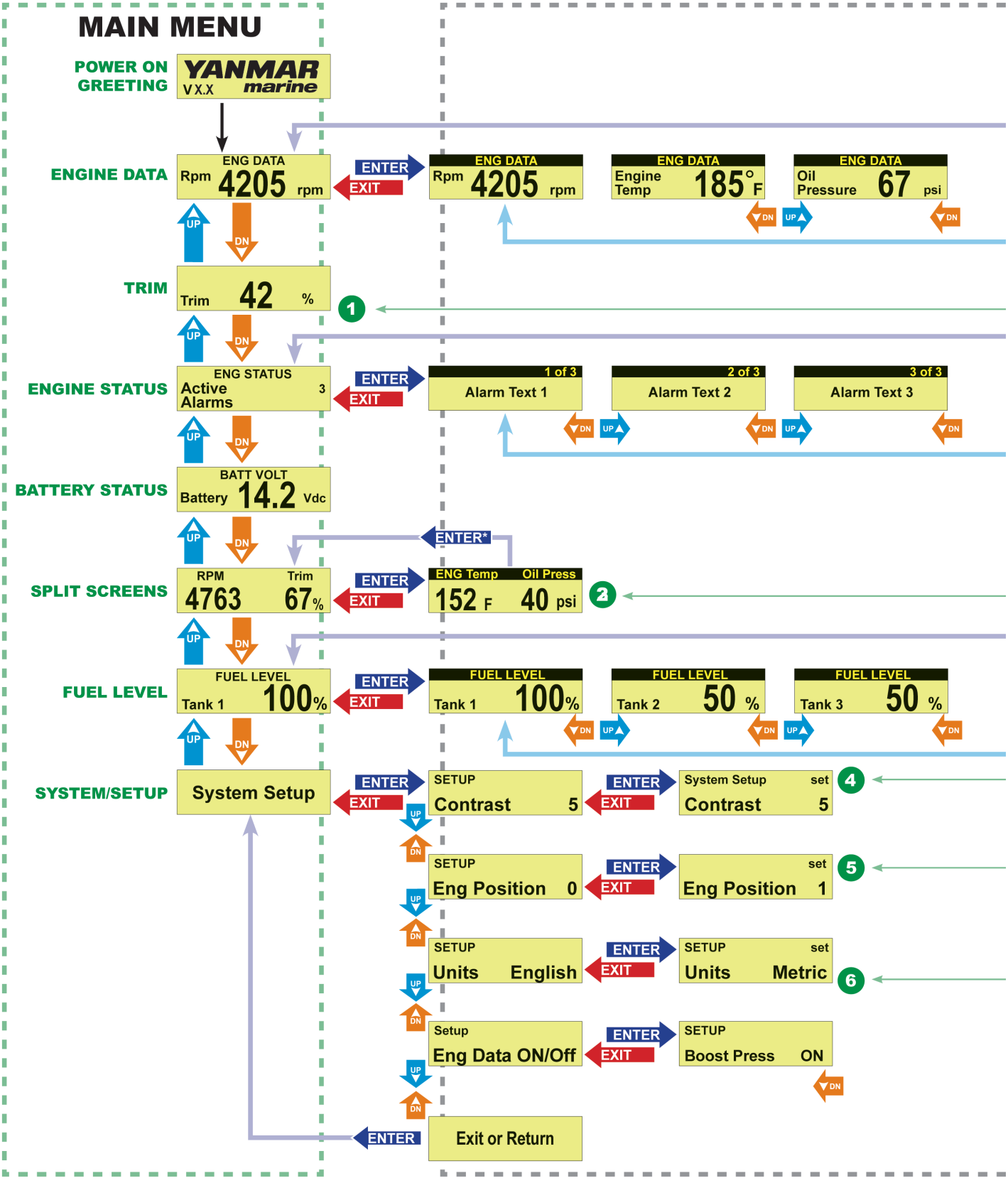

© Yanmar 2008

Tachometer Menu Structure

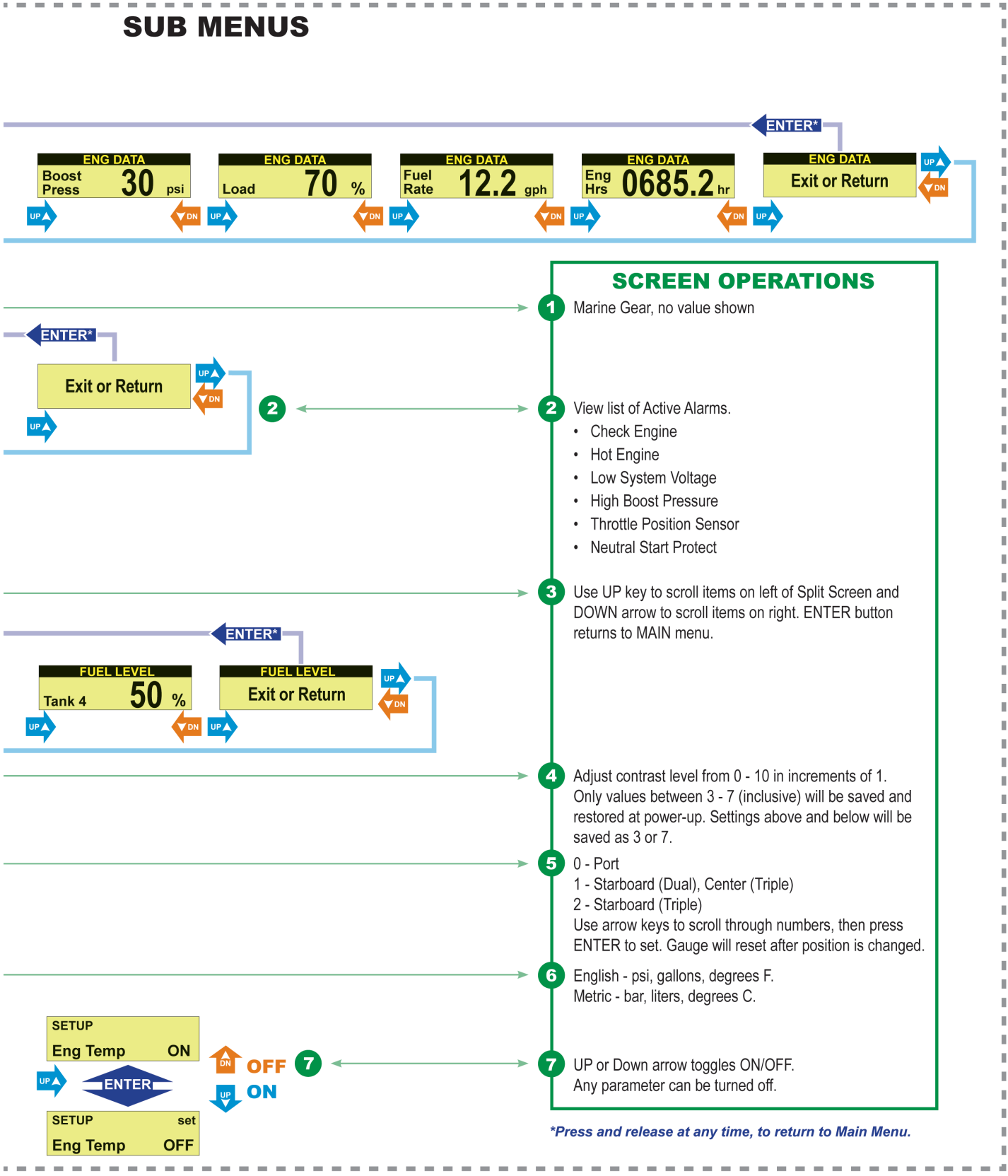

© Yanmar 2008

Warning Light

The warning light will come on and the buzzer will sound if any of the following conditions occur. The lights and buzzer will turn off automatically when the alarm condition returns to normal.

- Check Engine Alarm
- Low Oil Pressure Alarm
- Low Gear Lube Alarm (Stern Drive Only)
- Water in Fuel Alarm
- Any Engine Alarm

The digital display on the tachometer will allow you to determine some additional information about the alarm. See pages 14 and 15 to find the Engine Status section of the display.

Engine Status Information

The following alarms will be displayed in the Engine Status Display if they occur. They will go away when the alarm condition returns to the normal operating range.

- Check Engine Alarm
- Hot Engine Alarm
- Low System Voltage Alarm
- High Boost Pressure Alarm
- Neutral Start Protect Alarm
- Throttle Position Sensor
- Any Engine Alarm



Note: If the check engine alarm is displayed in the tachometer window, a DTC (Diagnostic Trouble Code) may be stored in the Engine Control Module memory. A trained technician with a diagnostic service tool can ready and clear any stored DTCs.

© Yanmar 2008

3” Gauge (Tachometer) with Key Cut

Note: The 2" and 3" gauges are supplied with a locking tab and flat.

When installation is being done with a CNC machine, use the "with Key Cut" template. When installation is being done with a hole saw, use the "without Key Cut" templates.

If this template has been downloaded electronically or copied from another document, please verify all template dimensions prior to cutting as different printers/copiers may scale differently.

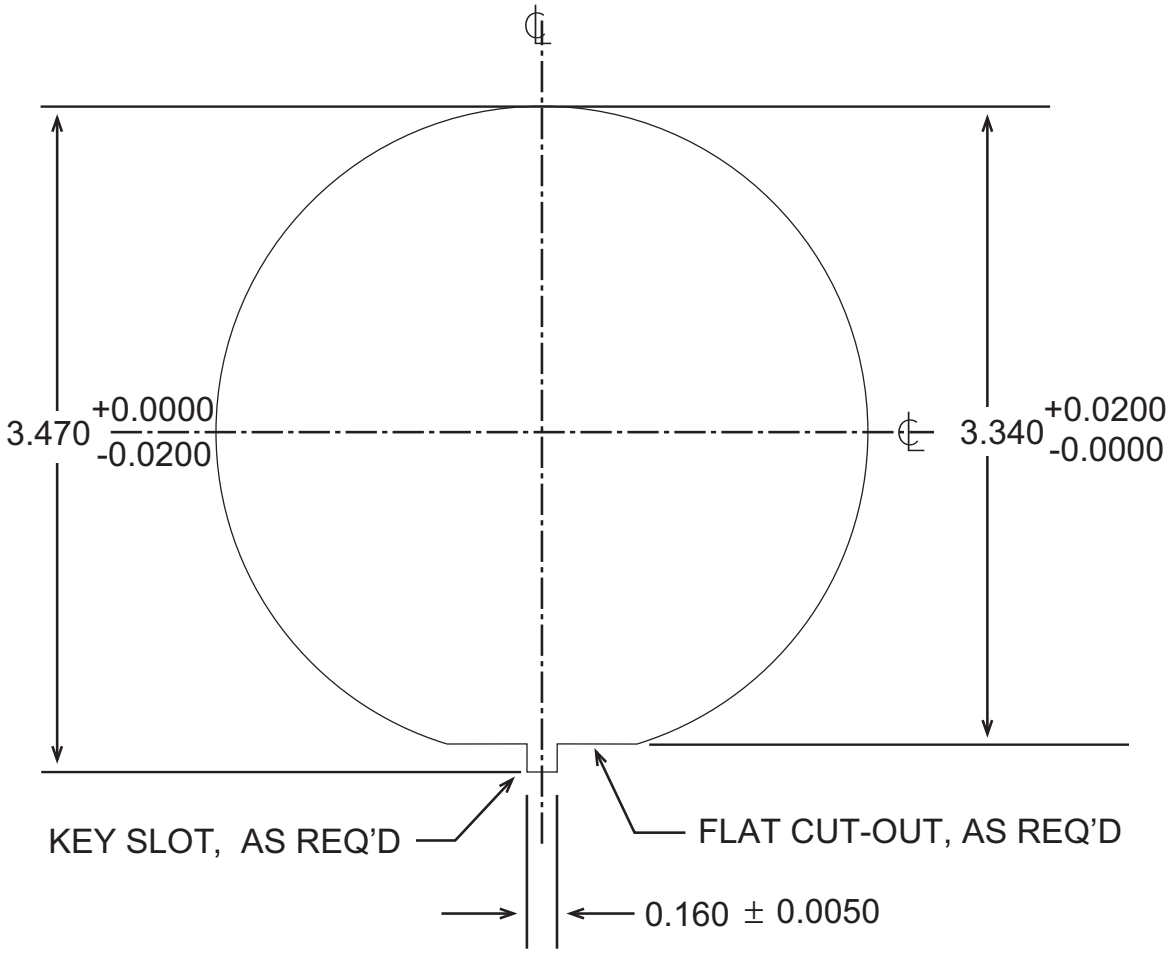

U.S. to Metric		
0.005 inches	=	0.1mm
0.02 inches	=	0.5mm
0.16 inches	=	4.1mm
3.34 inches	=	84.8mm
3.47 inches	=	88.1mm

© Yanmar 2008

Templates

This page left intentionally blank.

© Yanmar 2008

3” Gauge (Tachometer) without Key Cut

Note: The 2" and 3" gauges are supplied with a locking tab and flat.

When installation is being done with a CNC machine, use the "with Key Cut" template. When installation is being done with a hole saw, use the "without Key Cut" templates.

If this template has been downloaded electronically or copied from another document, please verify all template dimensions prior to cutting as different printers/copiers may scale differently.

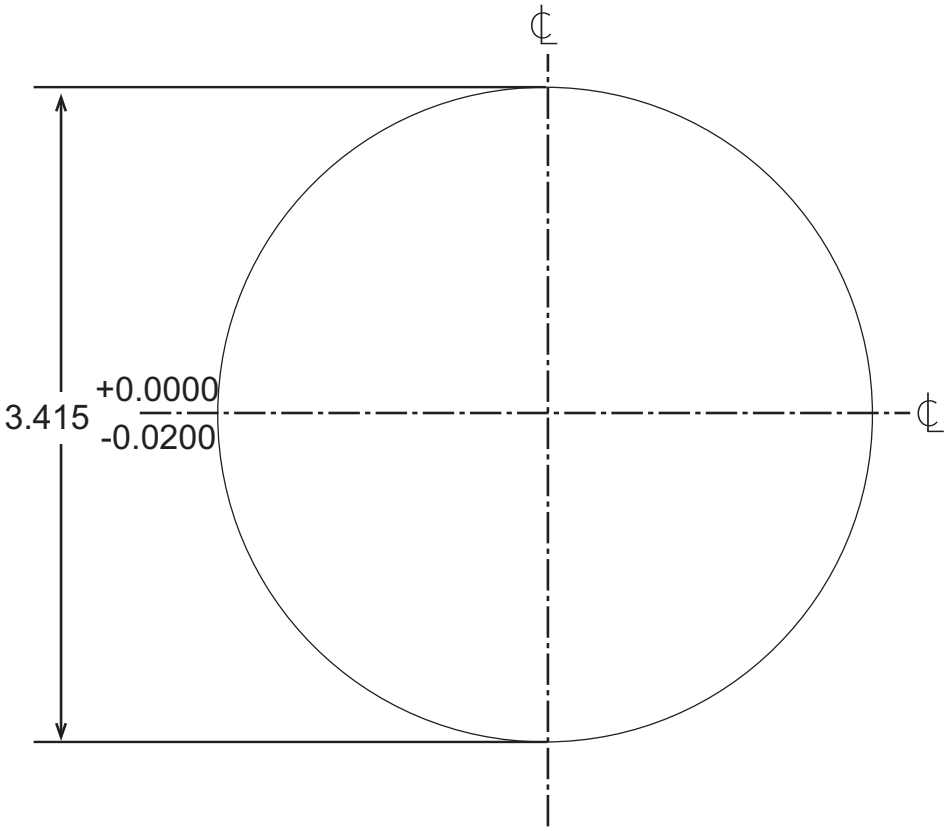

U.S. to Metric		
0.02 inches	=	0.5mm
3.415 inches	=	86.7mm

© Yanmar 2008

Templates

This page left intentionally blank.

© Yanmar 2008

2” Gauge with Key Cut

Note: The 2" and 3" gauges are supplied with a locking tab and flat.

When installation is being done with a CNC machine, use the "with Key Cut" template. When installation is being done with a hole saw, use the "without Key Cut" templates.

If this template has been downloaded electronically or copied from another document, please verify all template dimensions prior to cutting as different printers/copiers may scale differently.

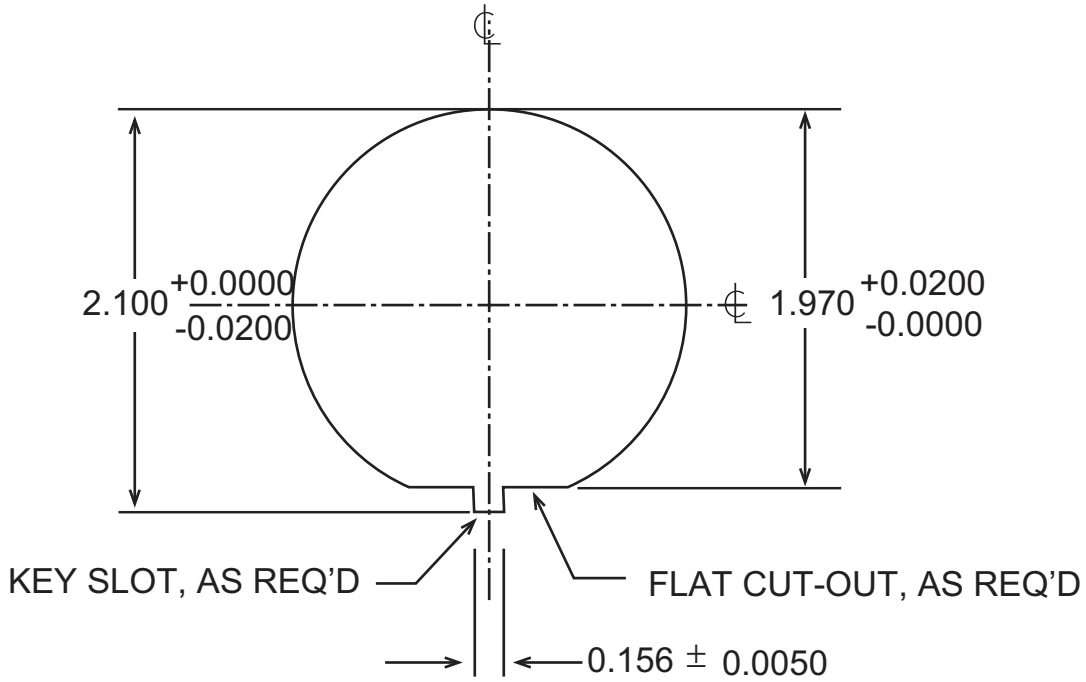

2” Gauge without Key Cut

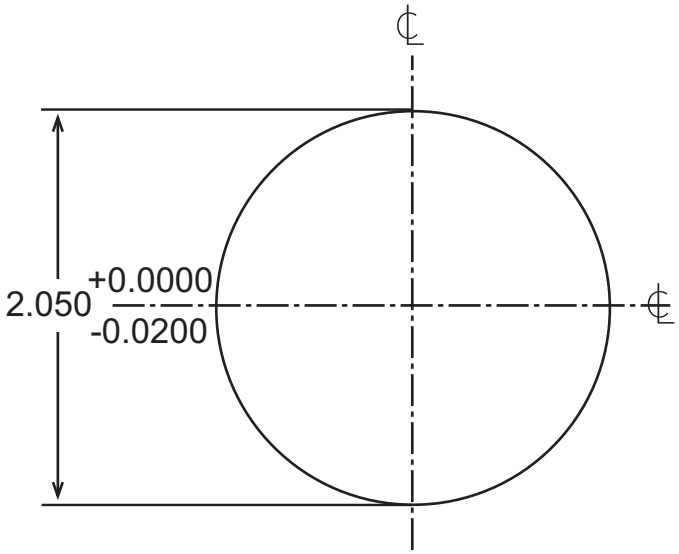

U.S. to Metric		
0.005 inches	=	0.1mm
0.02 inches	=	0.5mm
0.156 inches	=	4.0mm
1.97 inches	=	50.0mm
2.05 inches	=	52.1mm
2.1 inches	=	53.3mm

© Yanmar 2008

Templates

This page left intentionally blank.

© Yanmar 2008

CH18000 - Single Top Mount Control Template

If this template has been downloaded electronically or copied from another document, please verify all template dimensions prior to cutting as different printers/copiers may scale differently.

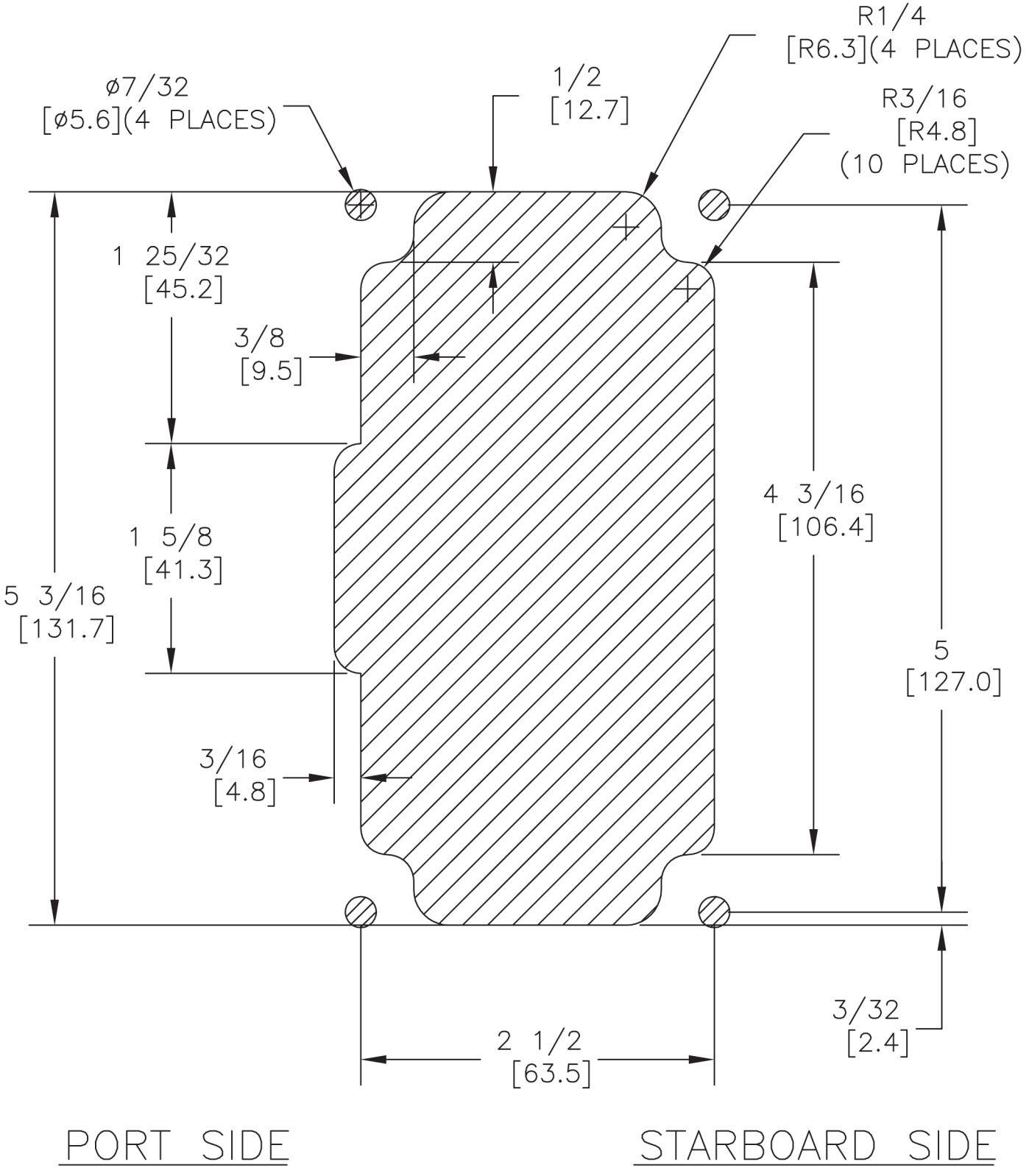

© Yanmar 2008

Templates

This page left intentionally blank.

© Yanmar 2008

CH18000 - Dual Top Mount Control Template

If this template has been downloaded electronically or copied from another document, please verify all template dimensions prior to cutting as different printers/copiers may scale differently.

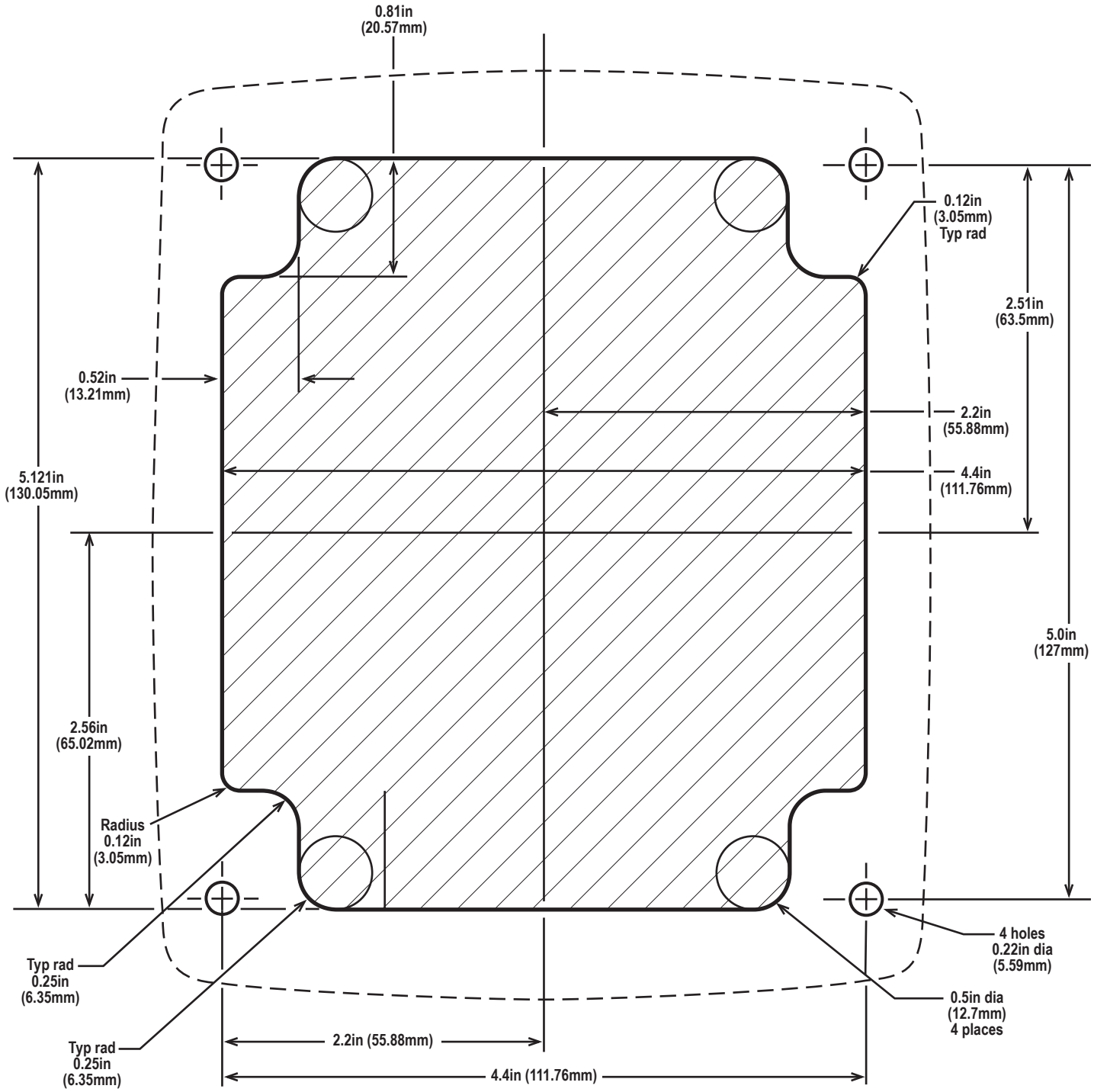

© Yanmar 2008

Templates

This page left intentionally blank.

© Yanmar 2008

CH18000 - Side Mount Control Template (Back Mount Installation)

If this template has been downloaded electronically or copied from another document, please verify all template dimensions prior to cutting as different printers/copiers may scale differently.

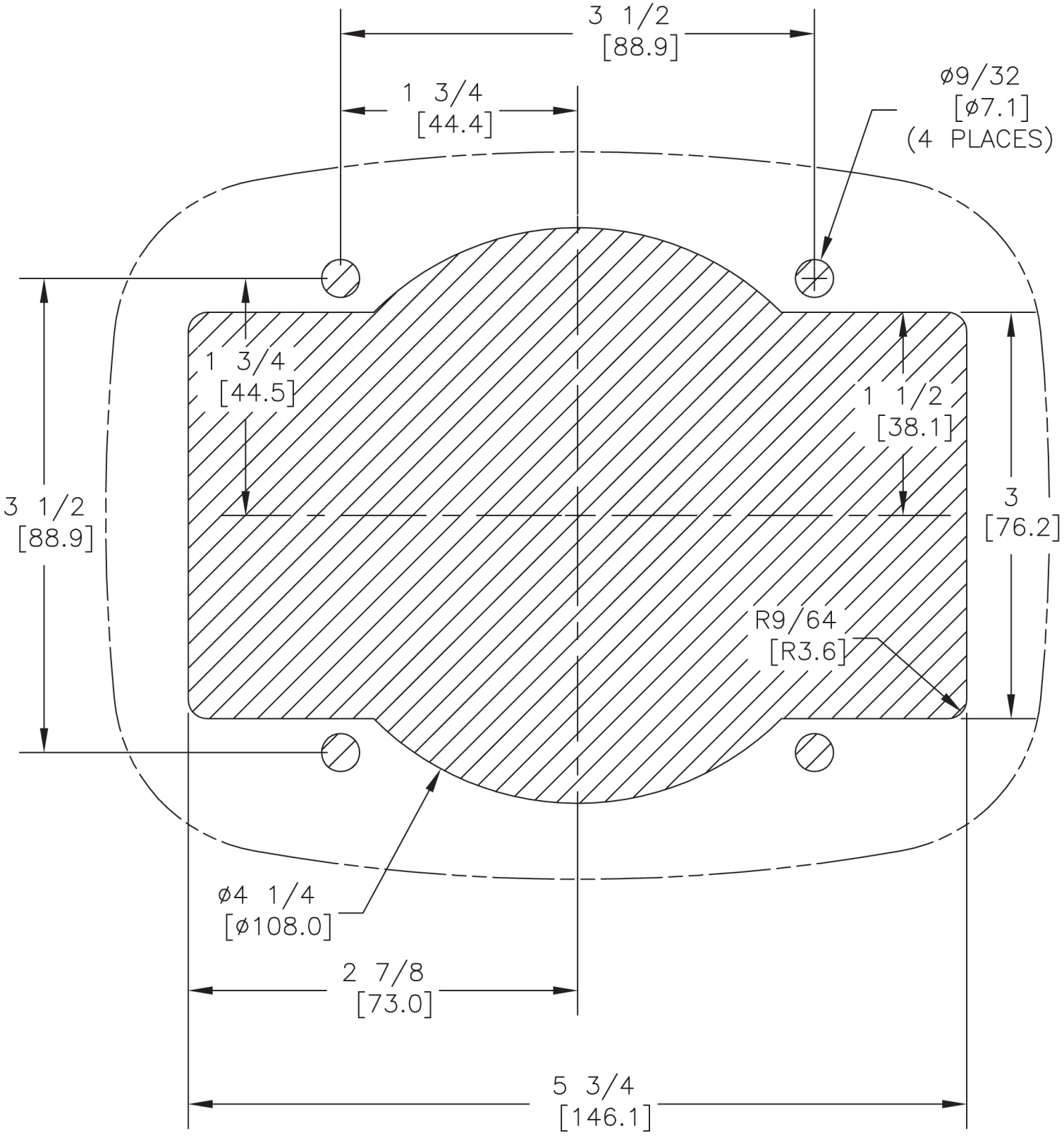

© Yanmar 2008

Templates

This page left intentionally blank.

© Yanmar 2008

CP19400 - Key Switch Panel (optional)

If this template has been downloaded electronically or copied from another document, please verify all template dimensions prior to cutting as different printers/copiers may scale differently.

Mounting Template

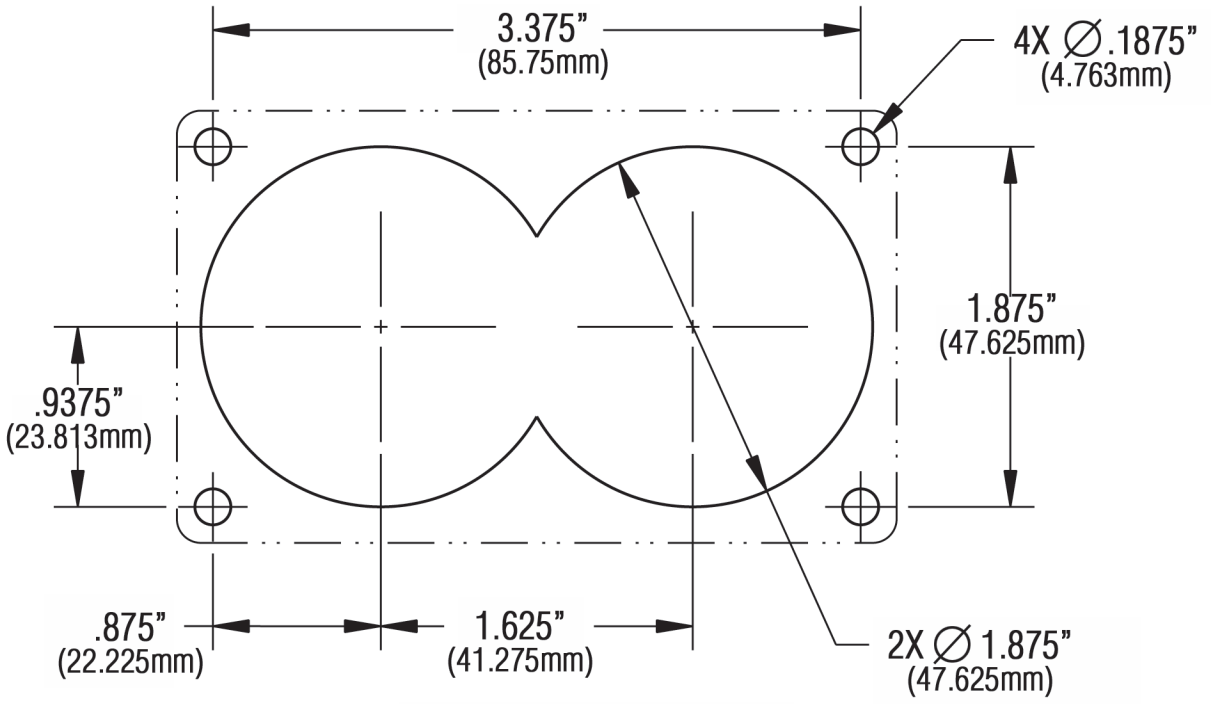

Panel Cut-outs

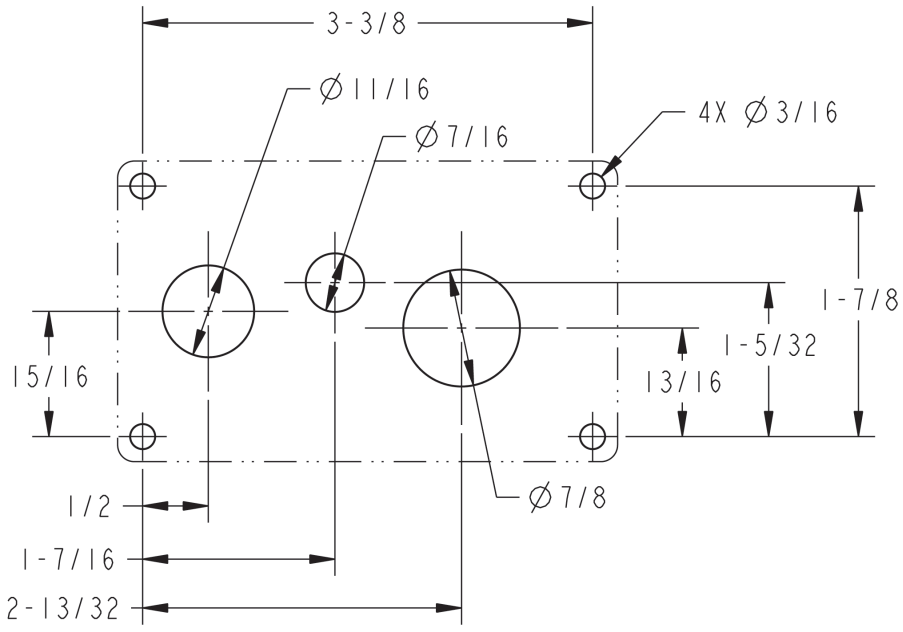

U.S. to Metric	
3/16 inches	= 4.76 mm
7/16 inches	= 11.11 mm
1/2 inches	= 12.7 mm
11/16 inches	= 17.46 mm
13/16 inches	= 20.64 mm
7/8 inches	= 22.2 mm
15/16 inches	= 23.81 mm
1 5/32 inches	= 25.56 mm
1 7/16 inches	= 36.51mm
1 7/8 inches	= 47.63 mm
2 13/32 inches	= 51.21 mm
3 3/8 inches	= 85.73 mm

© Yanmar 2008

Templates

This page left intentionally blank.

© Yanmar 2008

Appendix A: Analog Gauges - Stud Connections

Several options are available for the Classic Control System.

Analog Gauges

The following gauges are available for easy connection to the system. The wires are in the main harness and are located behind the helm.

Speedometer - This 3 inch gauge requires a pitot tube connection.



Trim, Fuel Level, Oil Pressure and Volt gauges are also available.



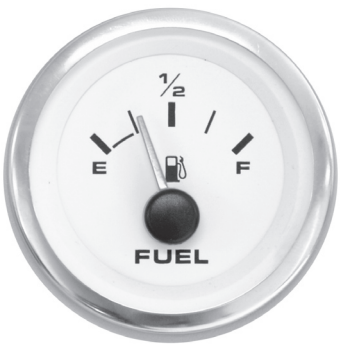



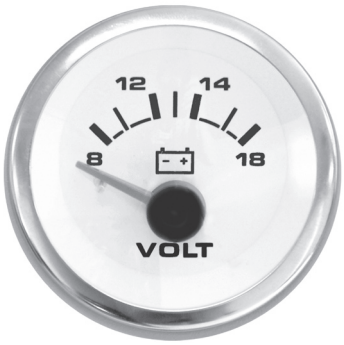

Analog Gauge Measurements

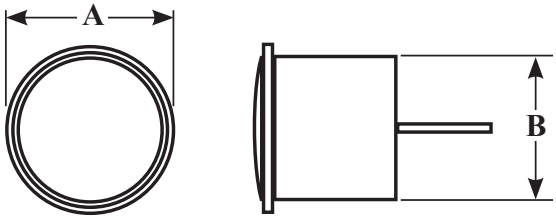

Analog Gauge Style	A	B
2” All Electrical Gauges	2.50	2.38
2” Mechanical Pressure Gauges	2.50	2.38

3” Master Tachometer/Slave Speedometer (Dimensions in inches)

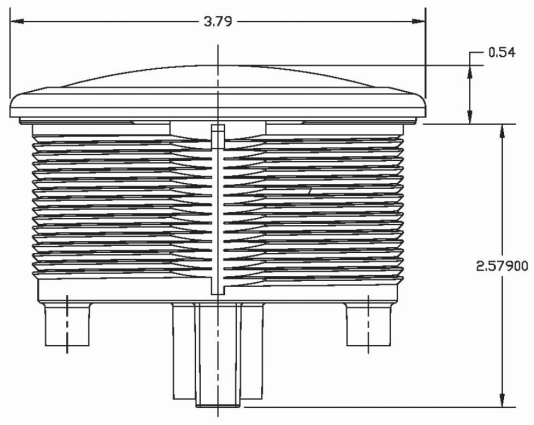

U.S. to Metric		
0.54 inches	=	13.7mm
2.579 inches	=	65.5mm
3.79 inches	=	96.3mm

Analog Gauge Connections

Some users specify plug-in gauges. To install, cut off the ring lugs on the engine harness and connect per the diagram below.

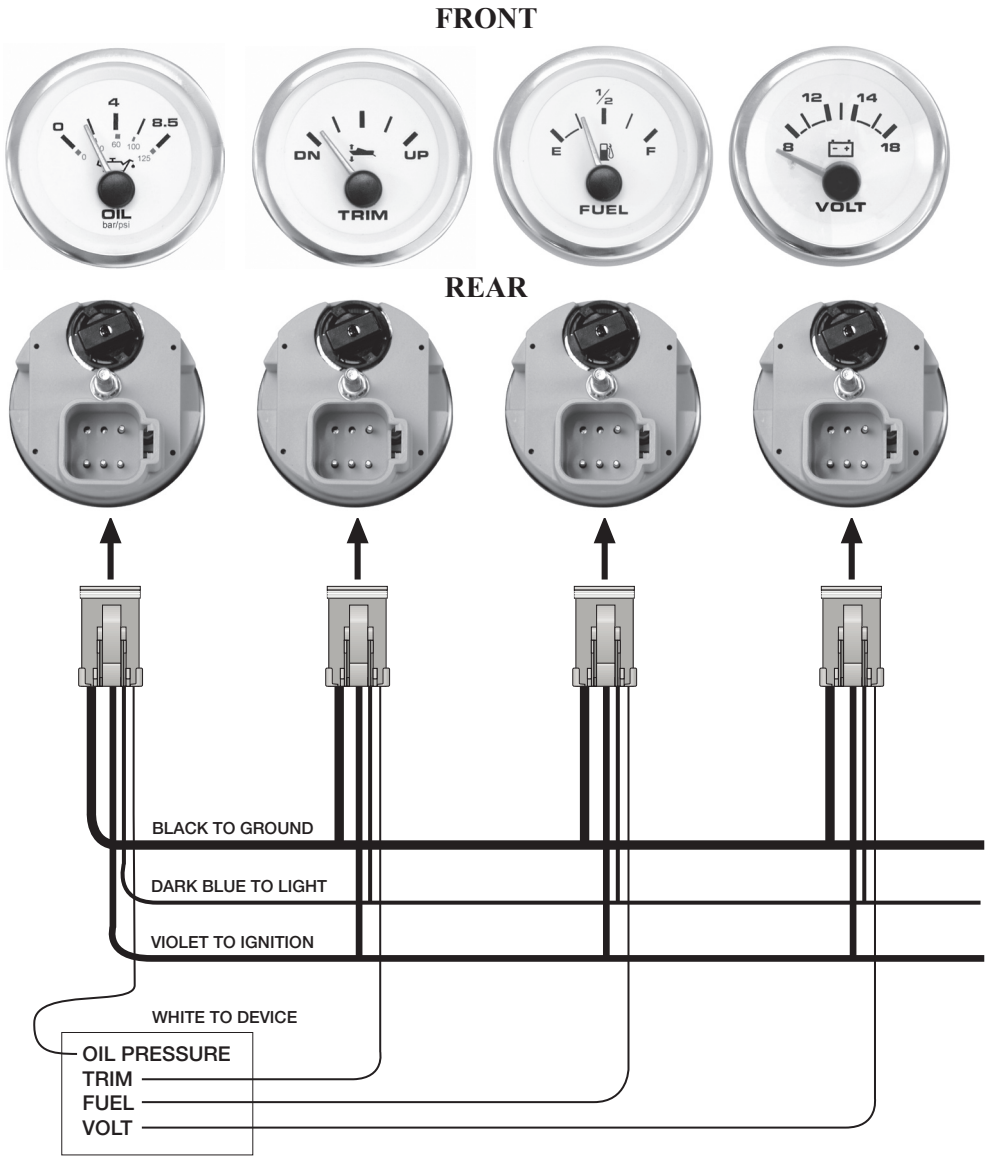

© Yanmar 2008

Appendix C: Trim Diagrams

BY Dual Engine (SL3) Classic and Sport Trim/Tilt Sterndrive Wiring Diagram

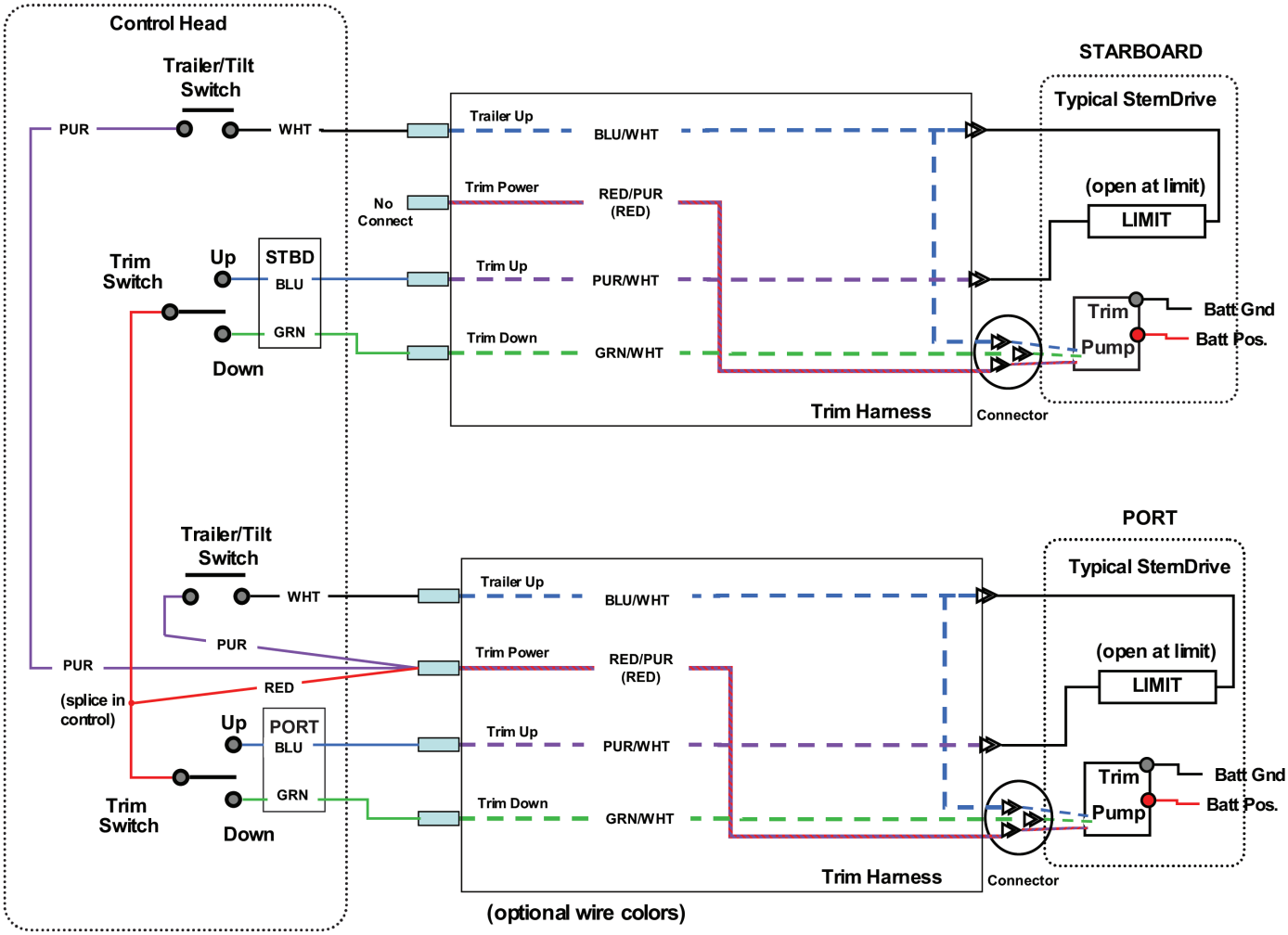

© Yanmar 2008

Appendix C: Trim Diagrams

BY Single Engine Classic and Sport Trim/Tilt Sterndrive Wiring Diagram

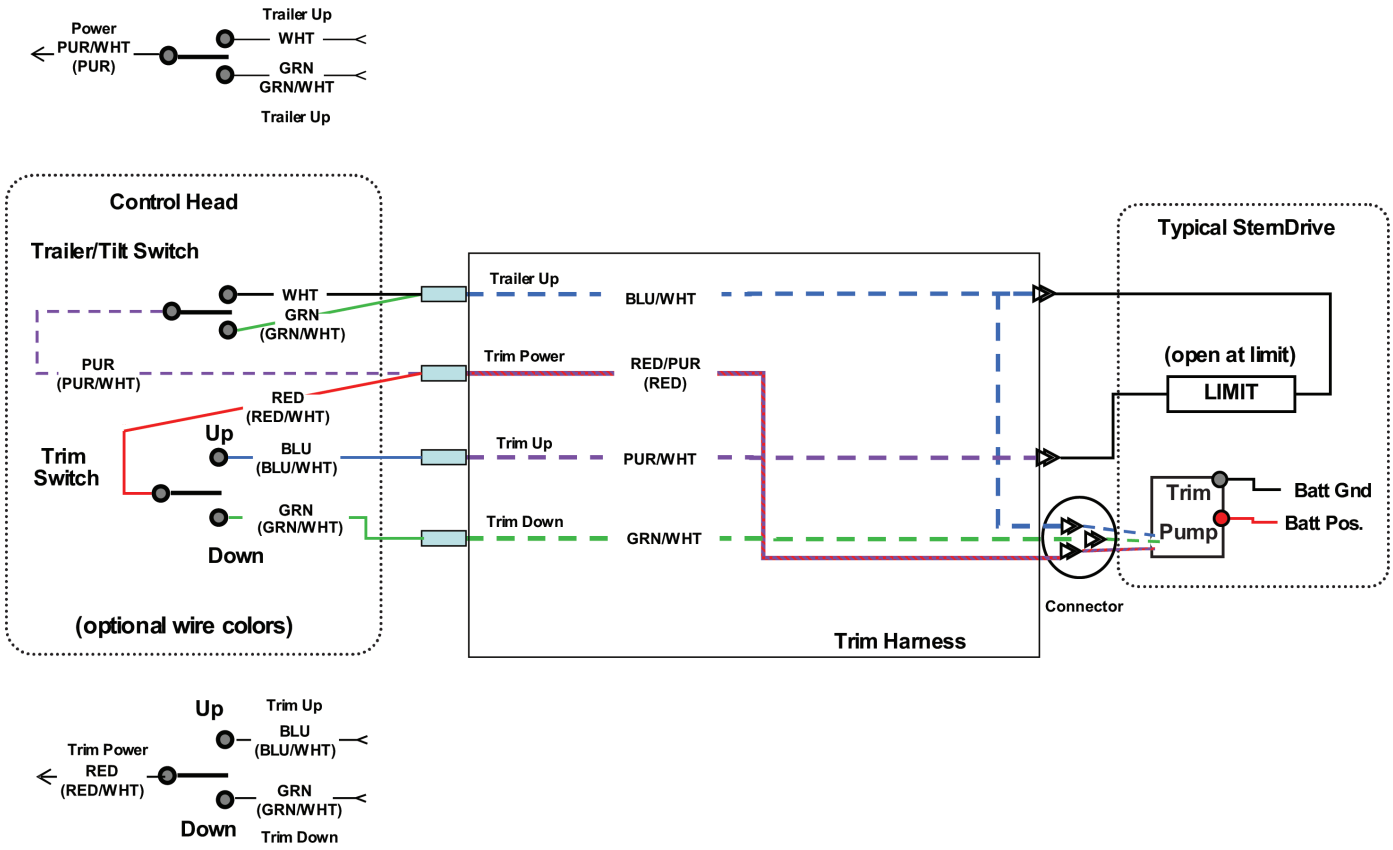

© Yanmar 2008

Yanmar Marine International B.V.

P.O. Box 30112, 1303AC Almere, The Netherlands
Brugplein 11, 1332 BS Almere-De Vaart, The Netherlands
Phone: +31 36-5493200
Fax: +31 36-5493209

Yanmar Co., Ltd
Head Office

1-32, Chayamachi, Kita-Ku, Osaka 530-8311, Japan

Yanmar Marine USA Corporation

101 International Parkway, Adairsville, GA 30103, USA
Phone: +1 770-877-9894
Fax: +1 770-877-7565

Yanmar Asia (Singapore) Corporation Pte Ltd.

4 Tuas Lane. Singapore 638613
Phone: +65 6861-3855
Fax: +65 6862-5195

Dealer Network: www.yanmarmarine.com


YANMAR